P.A. – S.p.A. – EQUIPAGGIAMENTI TECNICI DEL LAVAGGIO
VIA MILANO, 13 – CASELLA POSTALE 115 – 42048 RUBIERA (REGGIO EMILIA) – ITALY
Tel. +39 0522 623611 – Fax. +39 0522 629600 – R.E.A. RE 156319 – R.I. RE11535 – Mecc. RE 013446
C.F. e P. IVA 01035950359 – Cap. Soc. i.v. € 750.000,00 – Codice Identificativo C.E.E. IT 01035950359
ART. 2497 – BIS C.C. DIREZIONE E COORDINAMENTO BENETTI srl R.I. TRIB. DI RE 01480690351
Web: http://www.pa-etl.it – **E-mail:** info@pa-etl.it

VB 450-200/300 - Unloader Valve

Technical Booklet: E 258

Pressure regulating unloader valve.
It bypasses water flow at low pressure when gun shuts off.

DN 32

- **60.4020.00** VB 450/200 1”1/4 Bsp FF
- **60.4030.00** VB 450/300 1”1/4 Bsp FF

-Intended for use with high flow rates
-Special steel spring with superior mechanical features, to maintain calibration settings for longer
-Check valve specifically designed to prevent jammings
-Screw/Locknut adjusment to set maximum pressure level
-Dynamic seals with O-ring and sliding gasket
-Fixing screw slots

Technical Data

Max. Flow Rate: 450 l/min. Max. Temperature: 90°C **(1)**

P/N	RATED PRESSURE bar - MPa	PERMISSIBLE PRESSURE bar - MPa	MIN. ADJUSTABLE PRESSURE bar - MPa	(2)MAX PRESS. INCREASE AT SYSTEM SHUT OFF %	(3)PRESSURE DROP AT BYPASS RESET %	INLET OUTLET	BYPASS	WEIGHT g
60.4020.00	200 - 20	220 - 22	20 - 2	10,7%	43,8%	**1“1/4 Bsp FF**	**1“1/2 Bsp F**	5950
60.4030.00	300 - 30	330 - 33	30 - 3	7,8%	43,3%	**1“1/4 Bsp FF**	**1“1/2 Bsp F**	6025

(1) The valve is especially designed for a constant use at a water temperature of 60°C. It can withstand up to a max. temperature of 90°C for short intervals only.

(2) The max. pressure increase at system shut off is a percent value of calibration pressure. When it occurs, the valve is set in operation and the whole fluid is diverted into bybass.

(3) The pressure decrease at bypass reset is a percent value of calibration pressure. It indicates the pressure drop required for the valve to restore pressure in the system.

Instruction, Maintenance, Installation, Spare Parts Booklet. For a correct use of the item, please follow the instructions. **Please copy all relevant information on the use and maintenance booklet of the machine.**	n. 12.9258.00

DIMENSIONAL DRAWING

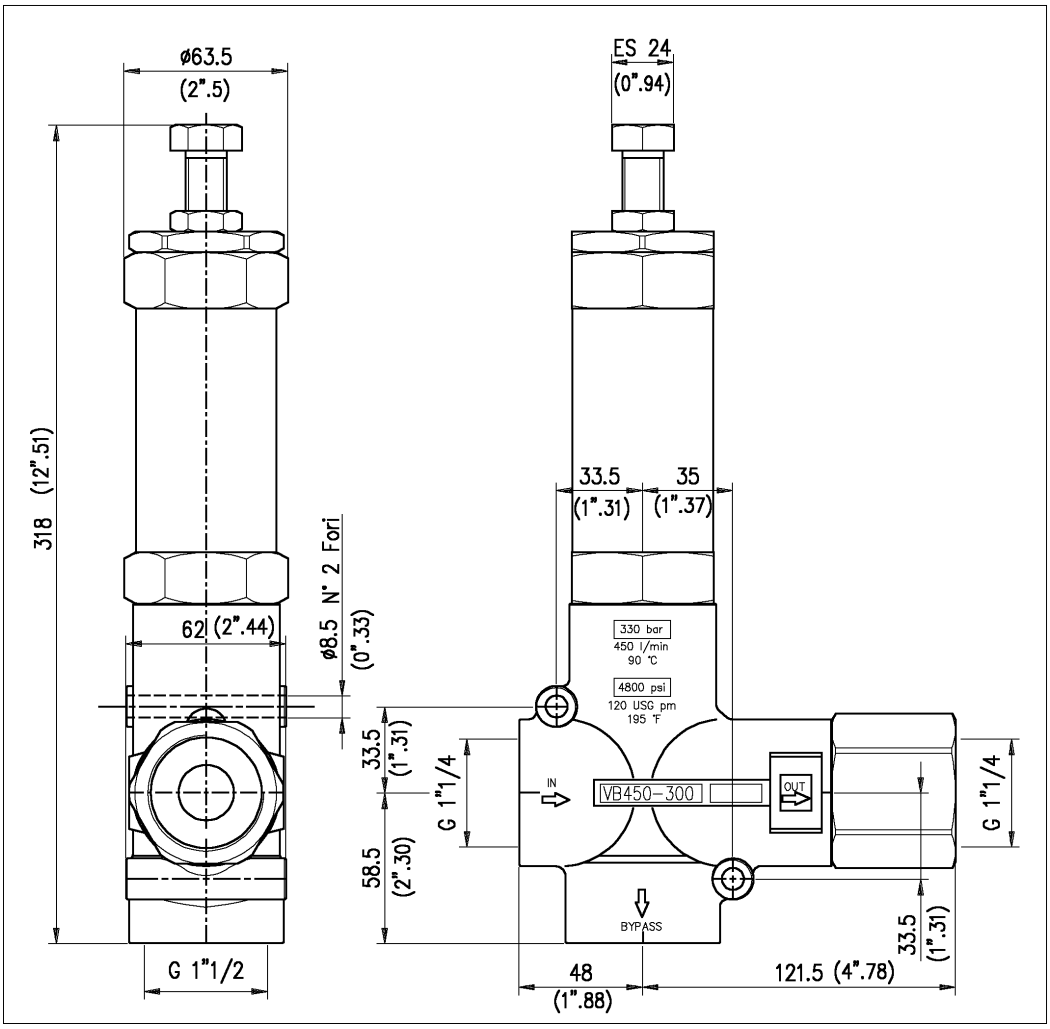

INSTRUCTIONS

SELECTION

This product is to be used with clean, fresh water, or water slightly additivated with ordinary detergents. For use involving harsh or even corrosive fluids, always ask PA Technical department first. Appropriate filtration should be installed when using unclean fluids.
To select the right valve, always take in consideration rated running data of the system (rated pressure, max. flow rate and max. temperature). In no case shall the system pressure exceed the **permissible pressure** marked on the valve.

INSTALLATION

On a water heating machine, fit the valve before **the heat generator**. This product is bound to be incorporated on a finished machine. On a water heater, it is necessary to mount accessories that limit the accidental increase of fluid temperature.

Always install a safety valve to protect the pressurized outlet channel.

Select the right nozzle size, which allows a regular discharge into bypass of at least 5% of the total flow rate of the system. This will keep a constant pressure setting and prevent pressure spikes at shut off which could damage the system.
By nozzle wearout, the pressure drops. When replacing the nozzle, reset the system to the original pressure level.

OPERATION

The valve regulates the max. system pressure through a piston, which acts on a cone that, normally positioned, closes the bypass opening. A check valve cuts out the delivery section, the pressure of which controls the piston drive.
All adjustments should be carried out when the system is in operation and the nozzle is working.

IMPORTANT: The nut (pos.15) must never be removed, as it is a mechanical safety device that limits the max pressure and prevents serious damage to persons and things.

DISCHARGE SYSTEM AND WATER ADDUCTION

The bypass conduct shall discharge outside of the machine or into a tank, but never directly into intake conduct. In case, it is advisable to install a baffled tank.

PROBLEM HANDLING: CAUSES AND SOLUTIONS

PROBLEMS	PROBABLE CAUSES	SOLUTIONS
Valve recycles frequently	Check Valve O-ring worn out Leaking couplings Bypass blocked or throttled	Replace Check and Restore Clean or Adjust
Valve does not reach desired pressure level	Piston seals worn out Material matter between seat and shutter Nozzle worn out	Replace Clean up seat Replace
Pressure spikes	Less than 5% of total flow rate discharged in bypass Excessive flow rate in bypass Adjustment carried out with spring completely compressed	Reset Choose different valve type or adjust passages Loosen knob and replace nozzle
Valve does not bypass at low pressure	Jammed check valve Check valve O-ring worn out Material matter on check valve	Clean or replace Replace Clean

REGULATIONS : *See Standard Manual.*

referred to in the ***Declaration of Conformity.***

For a correct use, follow the instructions given in this booklet and re-print them on the Use and Maintenace Manual of the machine.
Make sure that you are given **the original Declaration of Conformity** for the chosen item. This booklet is **applicable for all unloader valves type VB 450-200/300**

MAINTENANCE

All maintenace operations must be carried out by qualified personnel only.

ROUTINE: every 400 hours of operation (around 10000 cycles), check and lubrify seals with waterproof grease.

EXTRAORDINARY:every 800 hours of operation (around 20000 cycles), check conditions of seals and other internal components. If required, replace them with original PA spare parts.When installing the spares, lubrify them with waterproof grease.

IMPORTANT: in case of replacement, assemble the valve correctly, resetting all conditions to starting levels and making sure to fix the nut pos.25 with thread locking liquid.

The manufacturer is not liable for damages resulted from incorrect fitting and maintenance.

Technical data, descriptions and illustrations are indicative and subject to modification without notice.

60.4020.00 VB450/200 unload. 1"1/4 Bsp F
60.4030.00 VB450/300 unload. 1"1/4 Bsp F

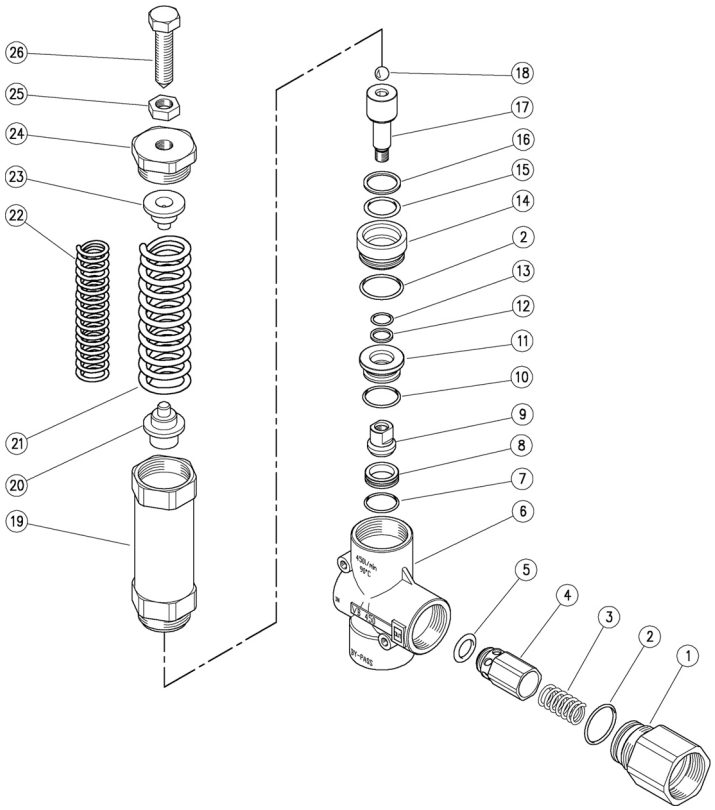

60.4220.00 VRP 450/200 reg.valv 1"1/4 Bsp F
60.4230.00 VRP 450/300 reg.valv.1"1/4 Bsp F

Pos.	P/N	Description	Q.ty	K1	K2	K3	K4	
1	60.4014.31R	Piston holder, 1"1/4 Bsp F	1					3
2	10.3208.28R	O-ring, 2,62x36,17 mm Ni85	2	•	•			5
3	60.4013.51R	Spring, 1,6x23,1x44mm (1,2)	1					3
4	60.4012.31R	Check valve (1,2)	1					3
5	10.3350.00R	O-ring, 6x18 mm (1,2)	1	•				10
6	60.4001.35R	Housing -VB450, 1"1/4Bsp F, brass	1					1
7	10.3077.08R	O-ring, 1,78x28,3 mm Ni 85	1	•	•			10
8	60.4002.51R	Seat	1	•	•			3
9	60.4003.51R	Shutter, M 12	1	•	•			3
10	10.3206.08R	O-ring, 2,62x28,25 mm Ni85	1	•	•			10
11	60.4005.31R	Bushing	1					3
12	10.4084.00R	Back-up ring, 16x20,5x2mm	1	•	•			5
13	10.3181.20R	O-ring, 2,62x15,88 mm	1	•	•			10
14	60.4007.31R	Bushing	1					3
15	10.3246.05R	O-ring 3,53x28,17 mm	1	•	•			5
16	10.4096.00R	Back-up ring, 28x34x2mm	1	•	•			5
17	60.4004.51R	Piston, M 12	1					3
18	14.7465.00R	Ball, 1/2" Sst.	1					5
19	60.4009.31R	Piston holder	1					1
20	60.4010.31R	Ball holder	1					3
21	60.4006.61R	Spring, 9x33x110mm	1					2
22	60.4015.61R	Spring (2,3)	1					2
23	60.4016.31R	Spring holder	1					3
24	60.4008.31R	Screw plug M 48	1					3
25	11.4845.00R	Nut, M16x1,5 Sst.	1					5
26	60.4011.51R	Screw, M16x54mm Sst.	1					3

Kit	P/N	Description	
K1	60.4022.24	Spares kit -VB 450/200-300, 10x1pcs.	1
K2	60.4222.24	Spares kit -VRP 450/200-300, 9x1pcs.	1

(1) 60.4020.00 (2) 60.4030.00 (3) 60.4230.00